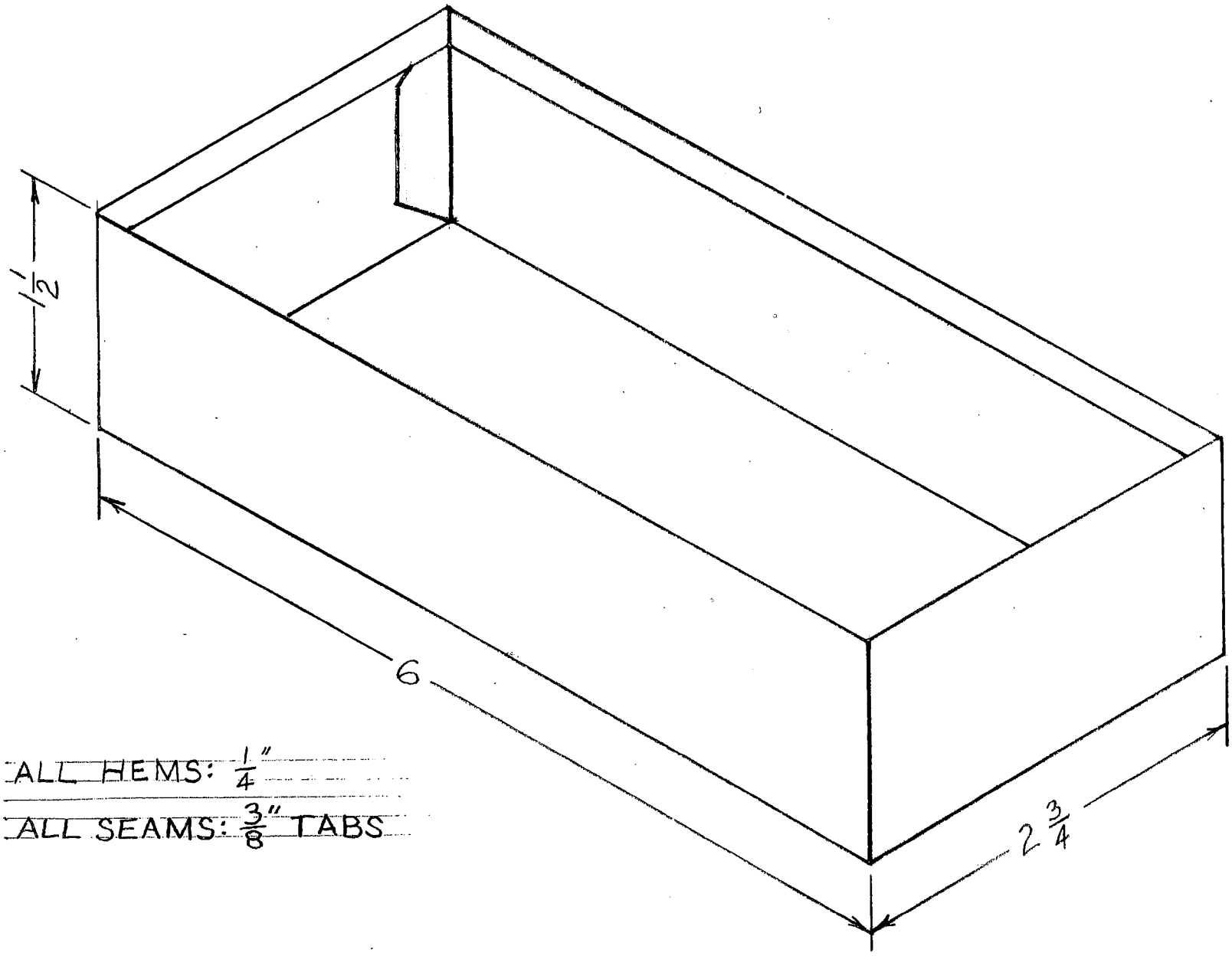

ALL HEMS: $\frac{1}{4}''$

ALL SEAMS: $\frac{3}{8}''$ TABS

SHEET METAL BOX